concept 2 INDOOR ROWER

MODEL E SCHEMATIC

TOP SEAT
ROLLER HARDWARE KIT (PN 1727)
INCLUDES: 1x PN 1211
2x PN 1302
1x PN 1209
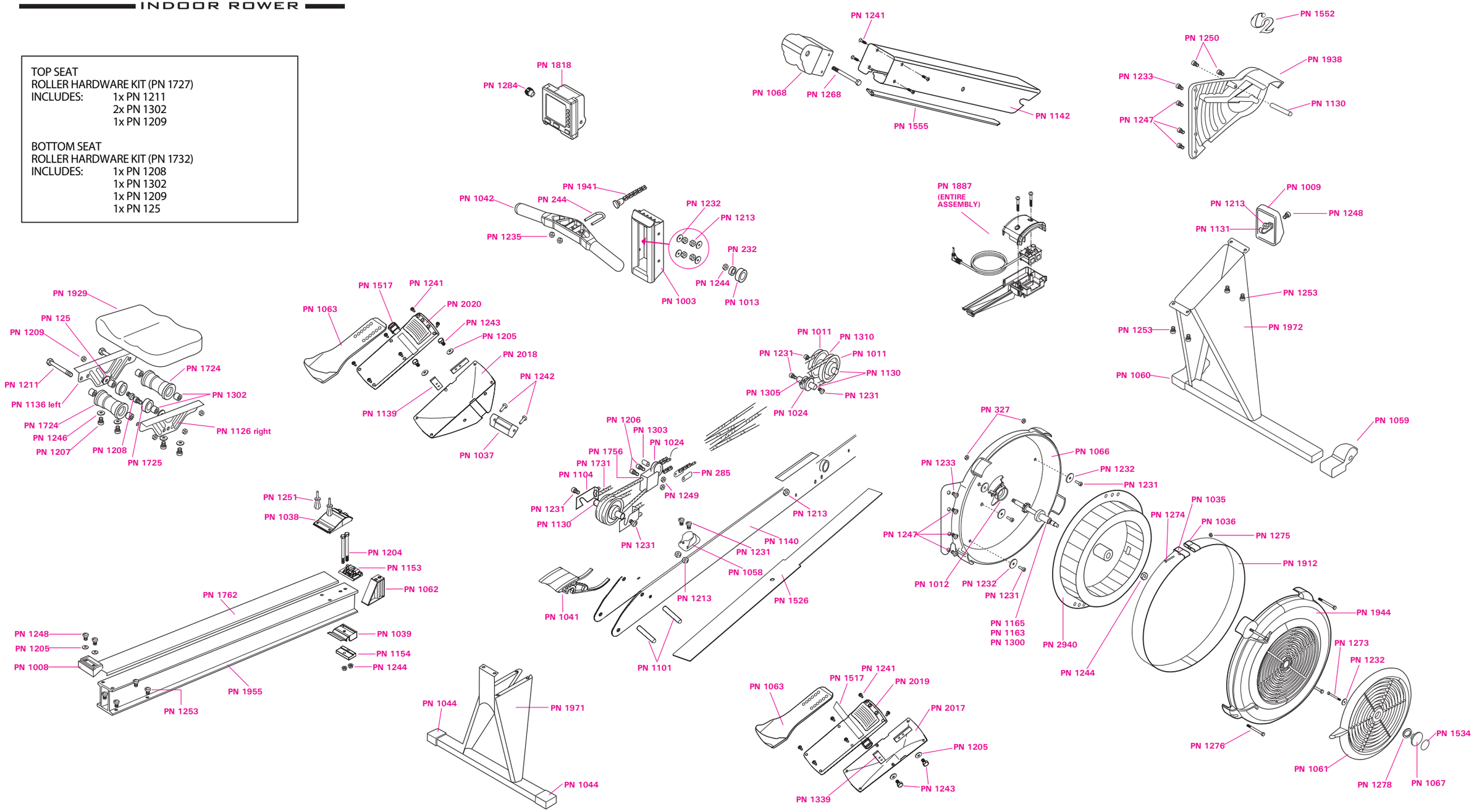
BOTTOM SEAT
ROLLER HARDWARE KIT (PN 1732)
INCLUDES: 1x PN 1208
1x PN 1302
1x PN 1209
1x PN 125